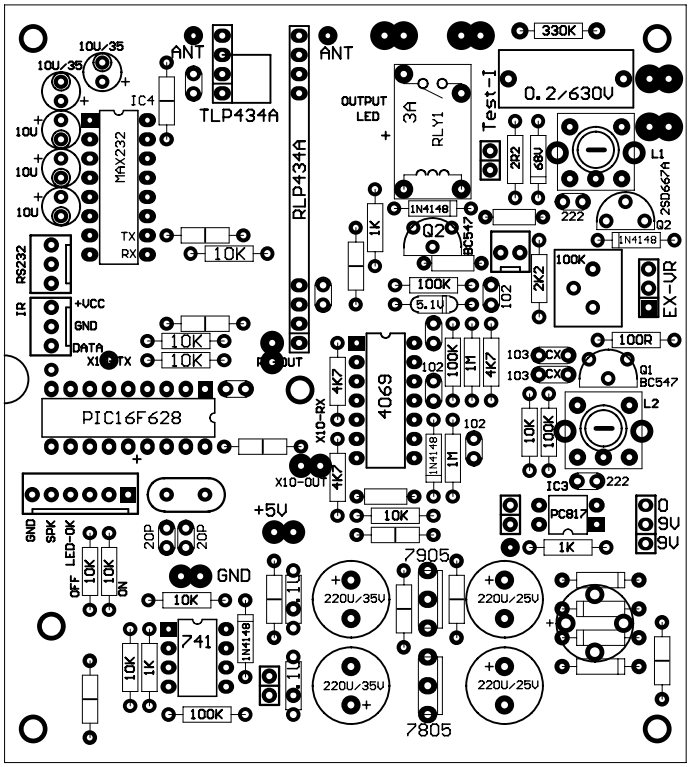
10U/35
10U/35
10U
10U
10U
IC4
MAX232
TX
RX
10K
ANT
TLP434A
ANT
RLP434A
OUTPUT
LED
3A
RLY1
1N4148
1K
Q2
BC547
100K
5.1V
102
330K
0.2/630V
Test-I
2R2
68U
L1
2SD667A
222
Q2
1N4148
2K2
100K
EX-VR
100R
103
CX
103
CX
Q1
BC547
L2
10K
100K
IC3
222
PC817
1K
0
9V
9V
RS232
IR
+VCC
GND
DATA
X10-TX
10K
10K
RF-OUT
PIC16F628
4K7
X10-RX
4K7
X10-OUT
4069
100K
1M
4K7
102
1N4148
1M
102
+5V
10K
GND
SDK
LED-OK
OFF
10K
10K
ON
20P
20P
GND
10K
741
1N4148
10K
1K
100K
0.1U
0.1U
220U/35V
220U/35V
7905
7805
220U/25V
220U/25V

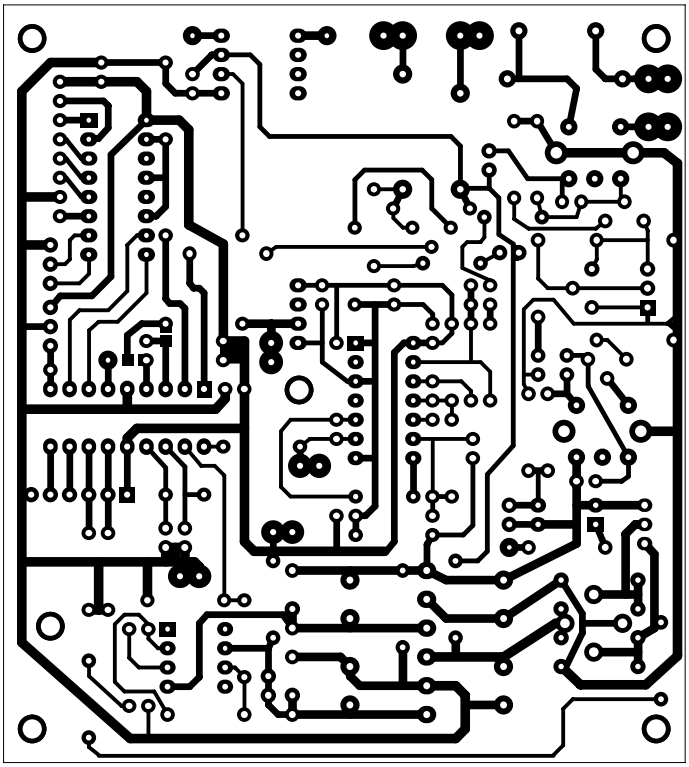

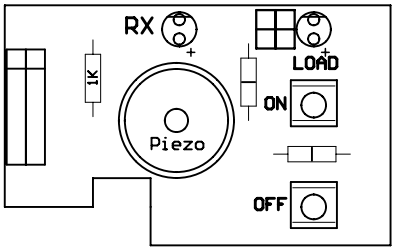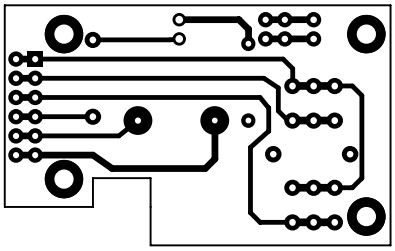
RX
+
1K
Piezo
+
LOAD
ON
OFF